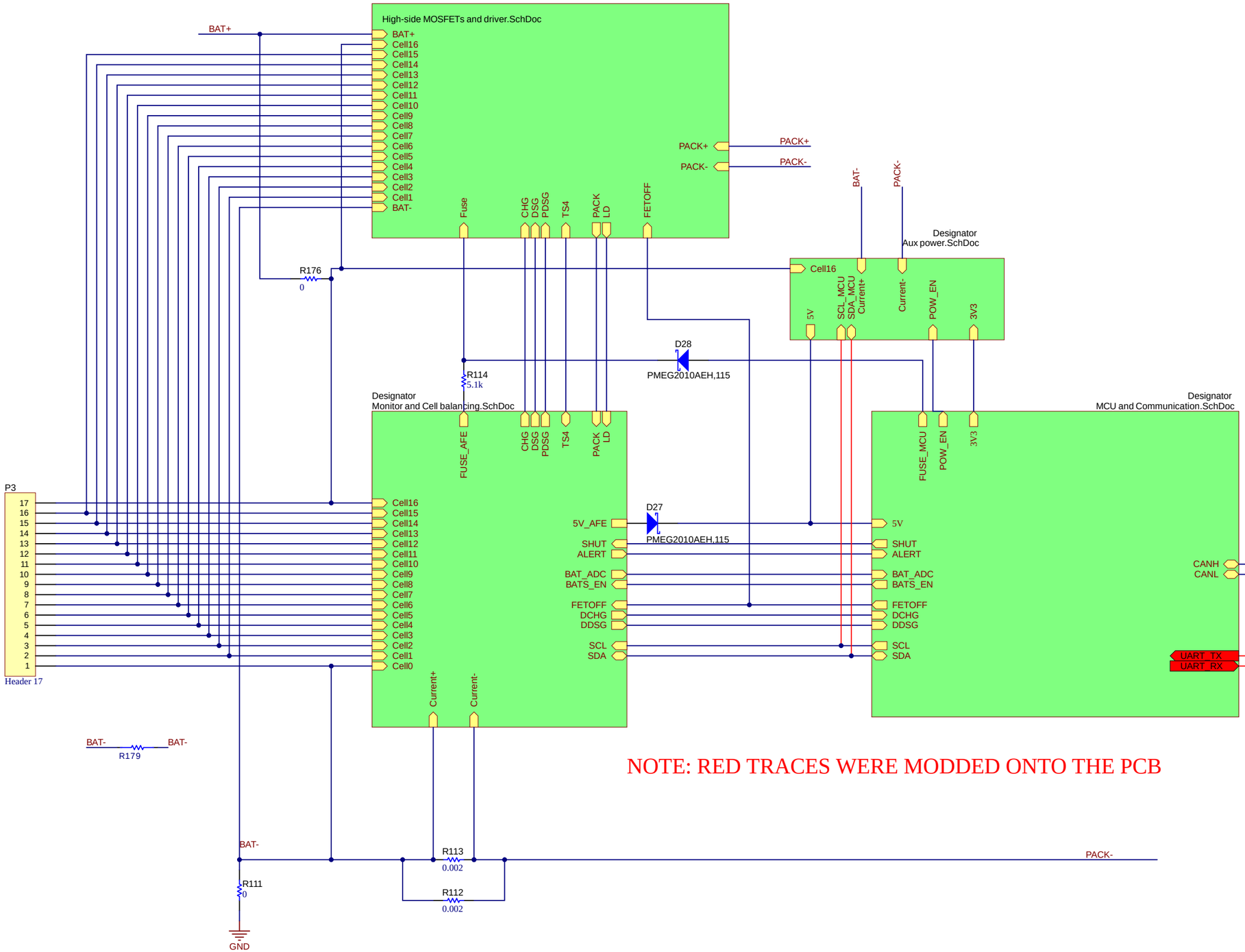

NOTE: RED TRACES WERE MODDED ONTO THE PCB

PCB Number: PMP23329
PCB Rev: A

Texas Instruments and/or its licensors do not warrant the accuracy or completeness of this specification or any information contained therein. Texas Instruments and/or its licensors do not warrant that this design will meet the specifications, will be suitable for your application or fit for any particular purpose, or will operate in an implementation. Texas Instruments and/or its licensors do not warrant that the design is production worthy. You should completely validate and test your design implementation to confirm the system functionality for your application.

Orderable: N/A		Designed for: Public Release	Mod. Date: 4/3/2025
TID #:		Project Title:	
Number: PMP23329	Rev: A	Sheet Title:	
SVN Rev: Not in version control		Assembly Variant: 001	Sheet: 2 of 7
Drawn By:		File: High level sch.SchDoc	Size: B
Engineer: S. Abedin		Contact: http://www.ti.com/support	

Texas Instruments
http://www.ti.com

© Texas Instruments 2023

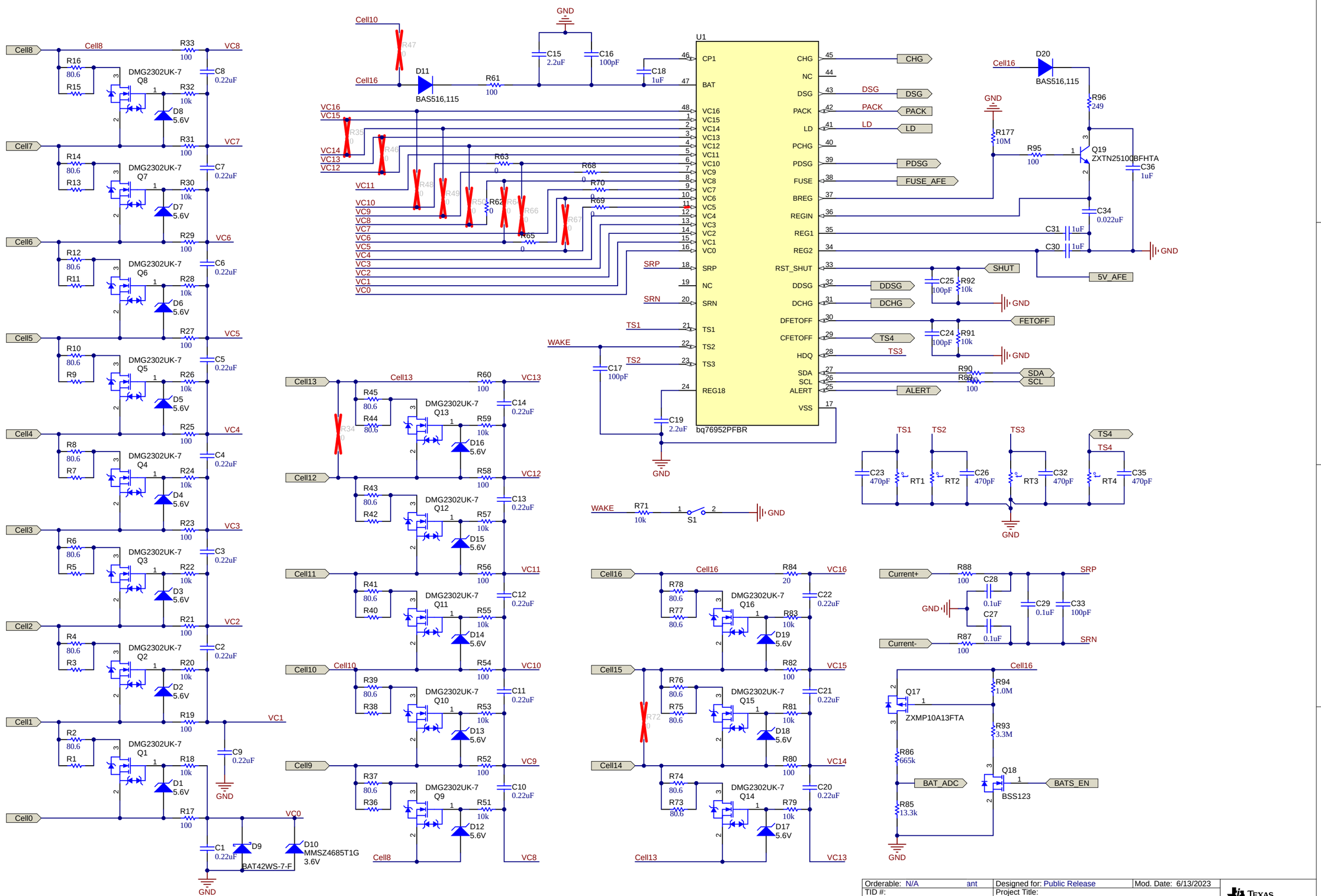

Texas Instruments and/or its licensors do not warrant the accuracy or completeness of this specification or any information contained therein. Texas Instruments and/or its licensors do not warrant that this design will meet the specifications, will be suitable for your application or fit for any particular purpose, or will operate in an implementation. Texas Instruments and/or its licensors do not warrant that the design is production worthy. You should completely validate and test your design implementation to confirm the system functionality for your application.

Orderable: N/A ant		Designed for: Public Release	Mod. Date: 6/13/2023
TID #:		Project Title:	
Number: PMP23329	Rev: A	Sheet Title:	
SVN Rev: Not in version control		Assembly Variant: 001	Sheet: 3 of 7
Drawn By:		File: Monitor and Cell balancing.SchDoc	Size: A3
Engineer: S. Abedin		Contact: http://www.ti.com/support	

Texas Instruments
http://www.ti.com

© Texas Instruments 2023

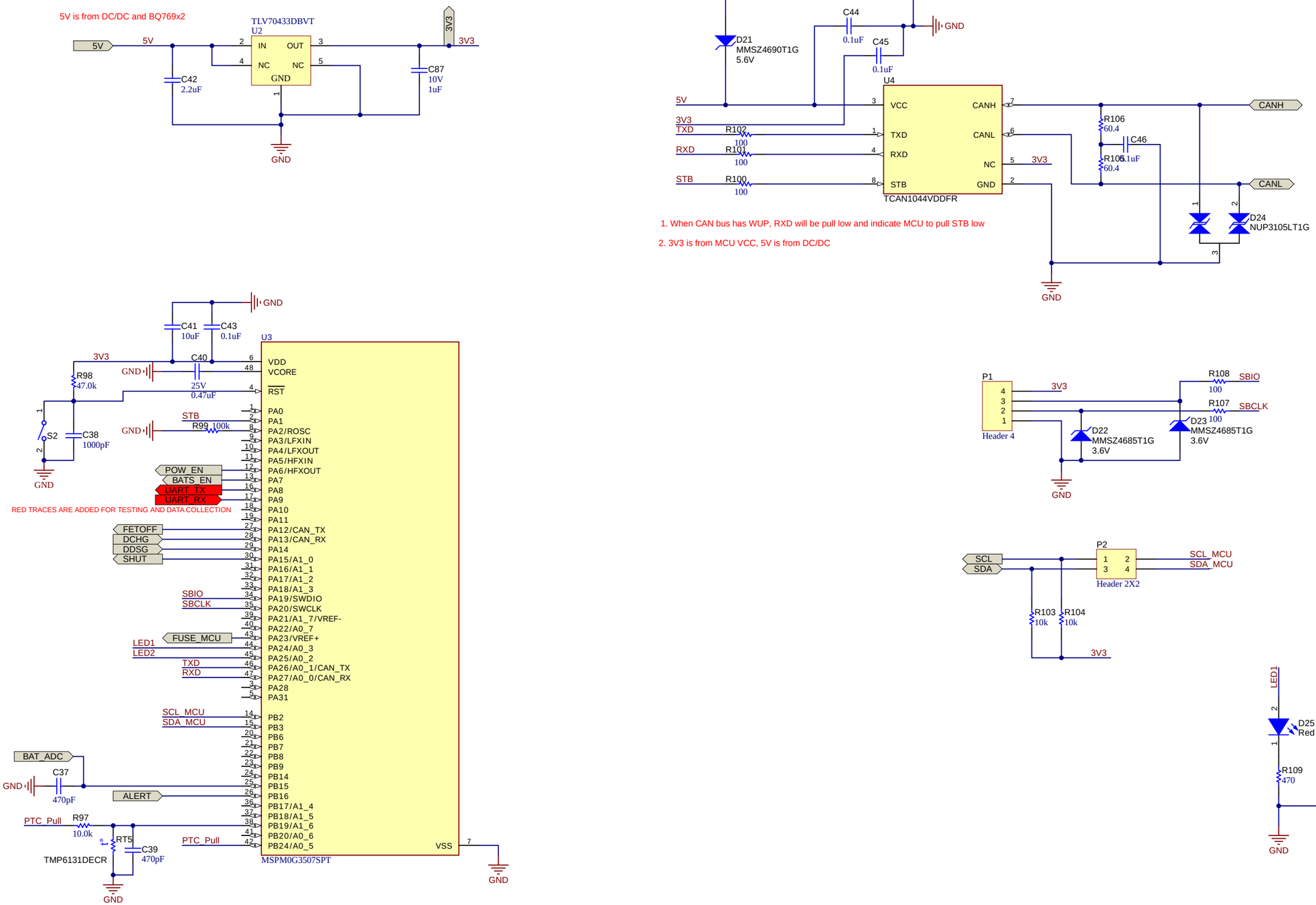

Texas Instruments and/or its licensors do not warrant the accuracy or completeness of this specification or any information contained therein. Texas Instruments and/or its licensors do not warrant that this design will meet the specifications, will be suitable for your application or fit for any particular purpose, or will operate in an implementation. Texas Instruments and/or its licensors do not warrant that the design is production worthy. You should completely validate and test your design implementation to confirm the system functionality for your application.

Orderable: N/A ant	Designed for: Public Release	Mod. Date: 4/3/2025	Texas Instruments
TID #:	Project Title:		
Number: PMP23329 Rev: A	Sheet Title:		
SVN Rev: Not in version control	Assembly Variant: 001	Sheet: 4 of 7	
Drawn By:	File: MCU and Communication.SchDoc	Size: A3	http://www.ti.com
Engineer: S. Abedin	Contact: http://www.ti.com/support		© Texas Instruments 2023

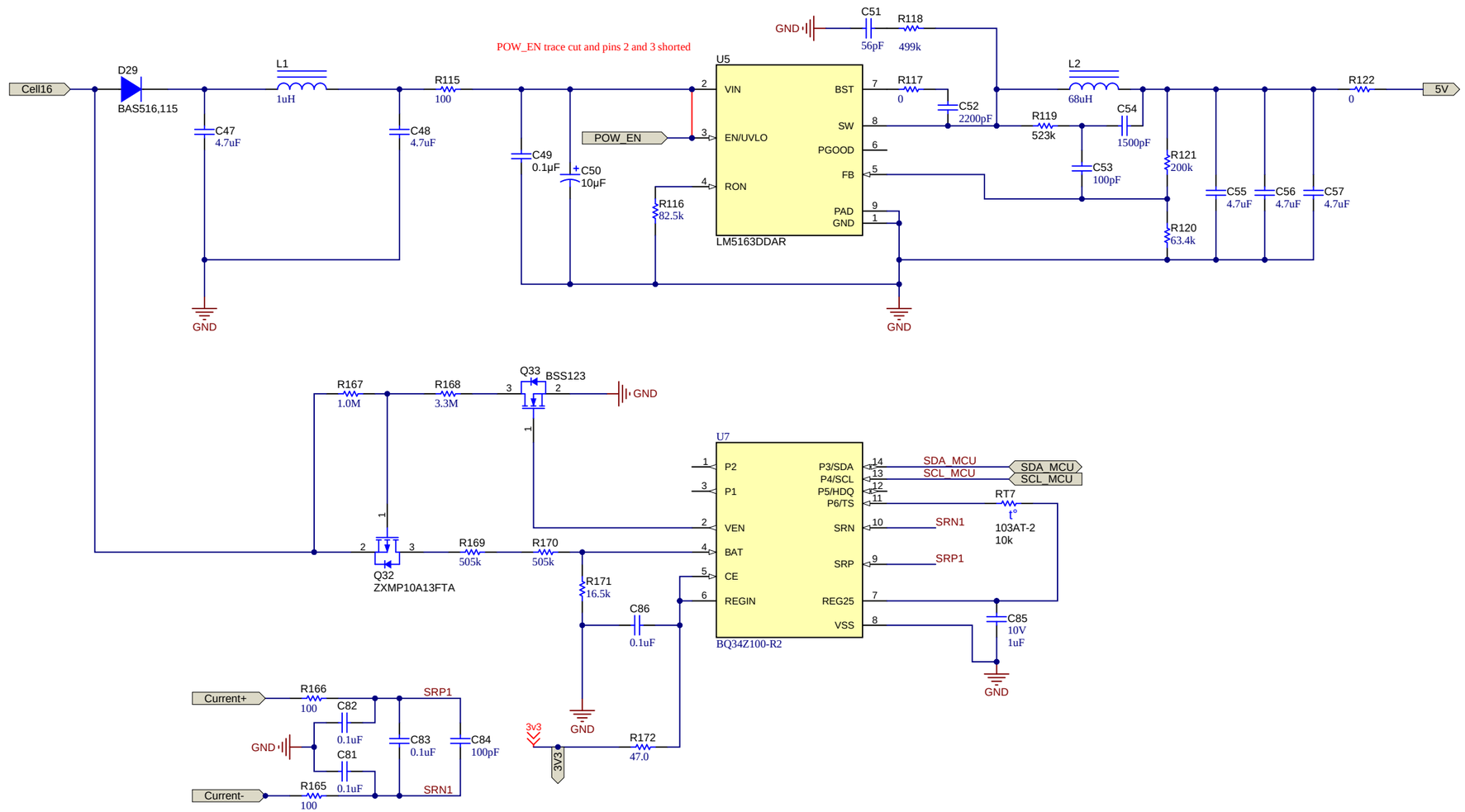

Texas Instruments and/or its licensors do not warrant the accuracy or completeness of this specification or any information contained therein. Texas Instruments and/or its licensors do not warrant that this design will meet the specifications, will be suitable for your application or fit for any particular purpose, or will operate in an implementation. Texas Instruments and/or its licensors do not warrant that the design is production worthy. You should completely validate and test your design implementation to confirm the system functionality for your application.

Orderable: N/A	Designed for: Public Release	Mod. Date: 4/3/2025	
TID #:	Project Title:		
Number: PMP23329 Rev: A	Sheet Title:		
SVN Rev: Not in version control	Assembly Variant: 001	Sheet: 5 of 7	
Drawn By:	File: Aux power.SchDoc	Size: A3	
Engineer: S. Abedin	Contact: http://www.ti.com/support		

Texas Instruments
http://www.ti.com

© Texas Instruments 2023

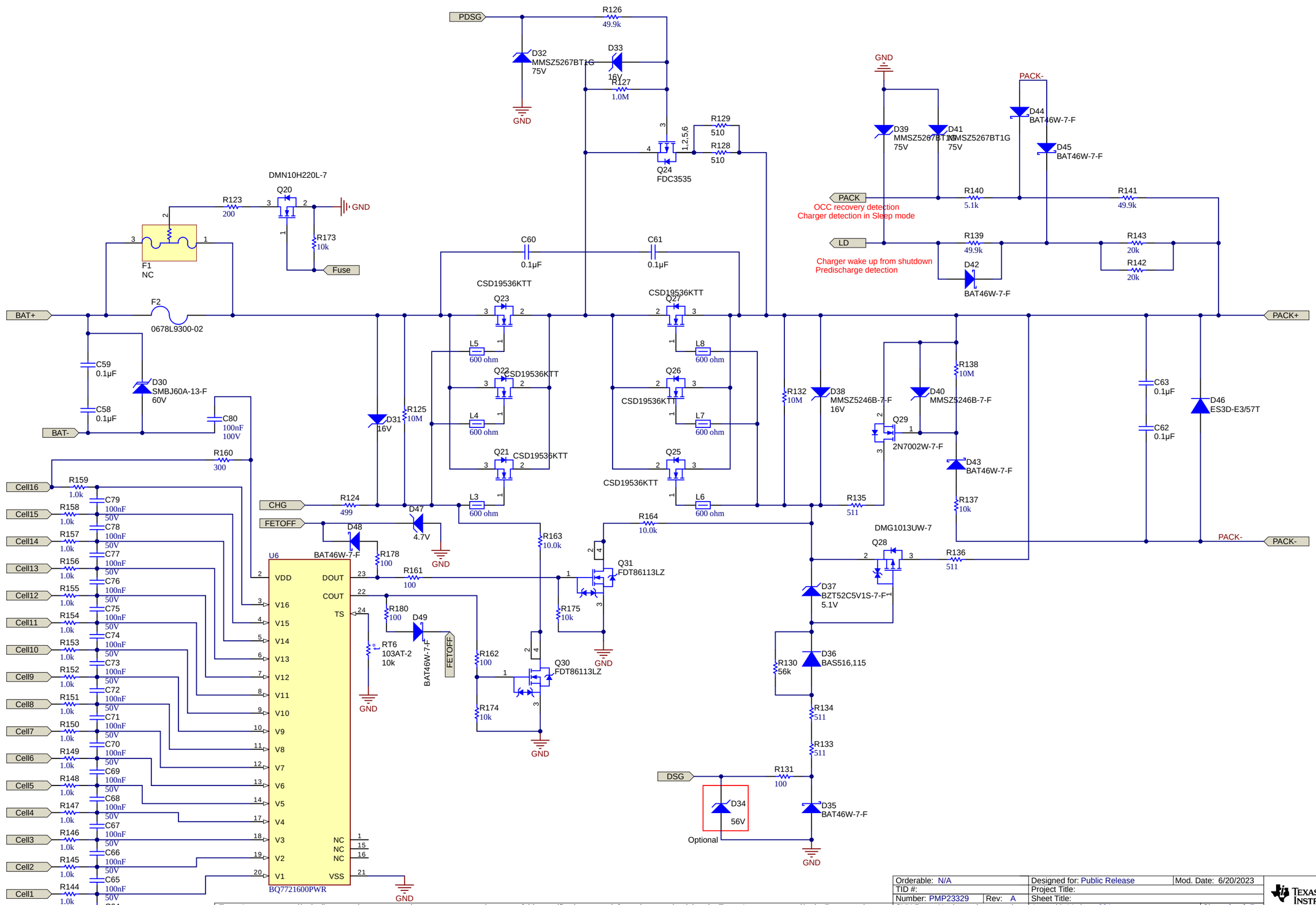

Texas Instruments and/or its licensors do not warrant the accuracy or completeness of this specification or any information contained therein. Texas Instruments and/or its licensors do not warrant that this design will meet the specifications, will be suitable for your application or fit for any particular purpose, or will operate in an implementation. Texas Instruments and/or its licensors do not warrant that the design is production worthy. You should completely validate and test your design implementation to confirm the system functionality for your application.

Orderable: N/A		Designed for: Public Release	Mod. Date: 6/20/2023
TID #:		Project Title:	
Number: PMP23329	Rev: A	Sheet Title:	
SVN Rev: Not in version control		Assembly Variant: 001	Sheet: 6 of 7
Drawn By:		File: High-side MOSFETs and driver.SchDoc	Size: A3
Engineer: S. Abedin		Contact: http://www.ti.com/support	

Texas Instruments
http://www.ti.com
© Texas Instruments 2023

IMPORTANT NOTICE AND DISCLAIMER

TI PROVIDES TECHNICAL AND RELIABILITY DATA (INCLUDING DATA SHEETS), DESIGN RESOURCES (INCLUDING REFERENCE DESIGNS), APPLICATION OR OTHER DESIGN ADVICE, WEB TOOLS, SAFETY INFORMATION, AND OTHER RESOURCES “AS IS” AND WITH ALL FAULTS, AND DISCLAIMS ALL WARRANTIES, EXPRESS AND IMPLIED, INCLUDING WITHOUT LIMITATION ANY IMPLIED WARRANTIES OF MERCHANTABILITY, FITNESS FOR A PARTICULAR PURPOSE OR NON-INFRINGEMENT OF THIRD PARTY INTELLECTUAL PROPERTY RIGHTS.

These resources are intended for skilled developers designing with TI products. You are solely responsible for (1) selecting the appropriate TI products for your application, (2) designing, validating and testing your application, and (3) ensuring your application meets applicable standards, and any other safety, security, regulatory or other requirements.

These resources are subject to change without notice. TI grants you permission to use these resources only for development of an application that uses the TI products described in the resource. Other reproduction and display of these resources is prohibited. No license is granted to any other TI intellectual property right or to any third party intellectual property right. TI disclaims responsibility for, and you will fully indemnify TI and its representatives against, any claims, damages, costs, losses, and liabilities arising out of your use of these resources.

TI’s products are provided subject to TI’s Terms of Sale or other applicable terms available either on ti.com or provided in conjunction with such TI products. TI’s provision of these resources does not expand or otherwise alter TI’s applicable warranties or warranty disclaimers for TI products.

TI objects to and rejects any additional or different terms you may have proposed.

Mailing Address: Texas Instruments, Post Office Box 655303, Dallas, Texas 75265
Copyright © 2025, Texas Instruments Incorporated